EVERSOURCE ENERGY

900 Line Rebuild

Town of Coventry Briefing

September 19, 2016

Agenda

EVERSOURCE ENERGY

- Project overview
- Project status
- Points of Contact

Project Overview

EVERSOURCE ENERGY

- Eversource has identified the existing 69-kV 900 Line as being in need of replacement based on the condition of the existing structures (woodpecker damage, rot, and overall deterioration).
- The condition of the structures can jeopardize the physical integrity and continued reliability of the 900 Line.
- The portion of the 900 Line proposed for rebuild is approx. 3.8 miles long between the Skungamaug Substation on River Road and Mansfield Junction with off of Stonehouse Road and would cover about 40 structures.
- Existing wood structures are to be replaced with weathering steel structures which must be taller in order to be in compliance with the 2012 NERC clearance standards, The old structures are between 38.5 feet and 56.5 feet tall and the new structures will be between 52 feet and 74.5 feet tall. Structure height is dependent on the topography and the distance between structures.
- New wire will be installed and energized at the same voltage – 69-kV.
- The installation of the access roads and the crane pads has already taken place.
- Construction sequence would be to take down the old structure and wire, install the new structure, string wire, and than energize the line.

Cross Section

EVERSOURCE ENERGY

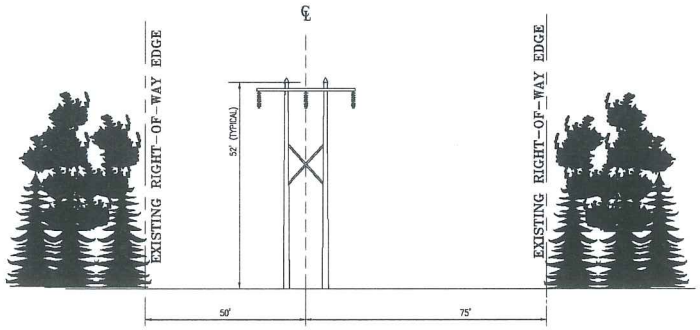

EXISTING R.O.W.

STANDARD WOOD H-FRAME STRUCTURE

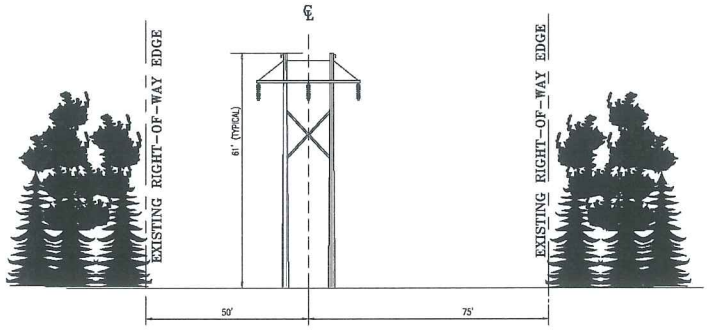

PROPOSED R.O.W.

STANDARD LIGHT DUTY (LD) H-FRAME STRUCTURE

	EXISTING		PROPOSED	
	OVERALL LENGTH (FT)	ABOVE GROUND HEIGHT (FT)	OVERALL LENGTH (FT)	ABOVE GROUND HEIGHT (FT)
MAX STRUCTURE HEIGHT	65'	56.5'	85'	74.5'
AVG STRUCTURE HEIGHT	60'	52'	70'	61'
MIN STRUCTURE HEIGHT	45'	38.5'	60'	52'

NOTE 1. ACTUAL STRUCTURE HEIGHTS PER PLAN AND PROFILE.
NOTE 2. REFERENCE DRAWING

NO.	DATE	AS BUILT REVISIONS	BY	CHK	APP	APP
A	7/7/16	ISSUED FOR 70% REVIEW	MJP	BAF	GEL	

EVERSOURCE ENERGY

TITLE: LINE 900
STRUCTURE 6590 TO SKUNGAMAUG S/S
TYPICAL ROW CROSS SECTION

BY MJP/TRC	CHKD BAF/TRC	APP GEL/TRC	APP
DATE 7/7/16	DATE 7/7/16	DATE 7/7/16	DATE
H-SCALE N.T.S.	SIZE ANSI B	FIELD BOOK & PAGES	
V-SCALE N.T.S.	V.S.	B.E.DWG.	
R.E. PROJ. NUMBER		DWG NO. 260015-T0002-SH1	

ES VER: 05/2015

7/7/2016 2:58 PM - mpoulin - C:\pwworkingemp\pw1\gluszczki\d1706238\260015-T0002-SH.1.dwg - AS-BUILT

Project Status/Schedule

EVERSOURCE ENERGY

- August 2016 – File a Petition with the CT Siting Council, copy to be provided to the town, letter will be sent to all abutting property owners
- October 2016 – CSC Decision
- October 2016 – Construction begins, work hours are expected to be Monday through Sunday, 7 am to 7 pm
- Year End 2016 – Construction and restoration complete

Contact Information

EVERSOURCE ENERGY

For municipal officials:

Marcia Wellman

Siting & Construction Services

860.728.4547

marcia.wellman@eversource.com

For the public:

Transmission Information Line 800.793.2202

Email: TransmissionInfo@eversource.com