Minutes
Coventry Town Council Meeting
September 19, 2016
Town Hall Annex

1. The meeting was called to order at 7:30 PM.
   Present: Julie Blanchard, Hannah Pietrantonio, Lisa Thomas, Thomas Pope, Andy Brodersen, Matthew O'Brien, Richard Williams
   Also present: John Elsesser, Town Manager

2. The Pledge of Allegiance was recited.

3. Audience of Citizens:

   Mary Kortmann, 430 Talcott Hill Road, indicated she is speaking as a citizen with knowledge of Board of Education activities. She said as required by State law, a Board of Education must maintain good public schools, manage the money appropriated by the Town for education and provide a properly maintained and safe school setting. The management of the Board budget is a complex process that takes time and effort to understand. Expenditures must be adjusted as the year goes on since children in the district move in and out and their needs change. The Board of Education has twice-monthly public meetings that are televised as well as public subcommittee meetings. Minutes and agendas are available on our website. Taxpayers are always welcome to attend meetings, speak at audience of citizens and email questions. The Board will attempt to answer questions within the limits of staffing or point the taxpayer to reports that answer their questions. Taxpayers will be better informed by getting their questions answered by education officials rather than having the information interpreted by others. Ms. Kortmann addressed some specific points mentioned in the most recent issue of the town newsletter:
   - The Board of Education requested that the Town put $150,000 (.6% of the budget) of funds from our operating budget that were unexpended due to good management and luck into the Board of Education's non-lapsing account. These funds are to be used according to a memorandum of understanding that exists between the Town Council and the Board. She thanked the Council for acting on that request.
   - The Board forwards its reports to the Town regularly following the meeting in which the reports are discussed. There was no July meeting. June and July reports were both forwarded on August 12th.
   - The Board of Education has never decided not to participate in the OpenGov platform. The conversion and ongoing license was never in the Board budget. The Board thanks the Council for authorizing picking up the $7000 cost for conversion and maintenance and will evaluate participation after finishing their legal requirements for filing end-of-year reports and participating in the annual audit. The Board would also like to receive reports on monthly unique users since the product may be a lot of money for the benefits. She noted that the Town took 18 months from the time the product was approved by the Council until they went live for taxpayer use.

   (Ms. Kortmann' s full remarks are attached to these minutes.)

   Gene Marchand, 46 John Paul Lane, is a 19-year resident of Coventry and a four-term

member of the Board of Education. He is speaking in response to seeing the fall newsletter that was sent to Coventry residents. The lead article from the Council Chairwoman seems to imply that the Coventry Board of Education (BoE) has not done a good job in managing the funding allocated to our Coventry schools, and has withheld financial information. This couldn't be further from the truth. The BoE consists of 4 Republicans and 3 Democrats, with a Republican Chairman. Mr. Marchand's experience over the past 5 years has been that this BoE has been totally bi-partisan, in fact non-partisan. Every decision has been based on what members felt was best for kids and their education. No decisions were made based on party affiliation, something that all elected officials should strive for. The school budget totals more than $27 million. During budget deliberations, Board members spend many hours scrutinizing every line item, ask many questions and make multiple adjustments. This is our statutory obligation as elected members. A budget is a planning document and there are many moving parts. Items like healthcare, fuel and heating oil and special education placements are always best estimates based on all facts available. The BoE budget is audited every year, just like the Town budget and by the same firm. The Coventry BoE has consistently submitted some of the lowest percentage increases of any town in the state. In a grouping of towns similar to Coventry in population and socioeconomic factors, Coventry is 28th out of 33 in per-pupil expenditures. Only 5 towns spend less and yet we have a high-functioning school system with rising test scores, state of the art technology, a preschool, full-day kindergarten and a glowing NEASC evaluation. Area schools look to Coventry for guidance on how we achieved these outcomes. One of the most important responsibilities for any town is to provide a quality education for its children. He believes we are doing that, and in a cost-effective manner. He is proud to be an elected member of a governmental body that takes its responsibilities seriously, believes in a culture of respect and makes decisions irrespective of political ideology. Decisions are made based on what's best for the children and most cost effective for our taxpayers. School administration and the BoE members have been transparent in these endeavors and will continue to be. Any suggestions to the contrary are misguided and misinformed. (*Mr. Marchland's full remarks are attached to these minutes.)*

Gary Jonas, Dunn Rd. was present to express concern about ongoing issues regarding a group home known as Grant House on Dunn Road that opened in 2007. When the home originally opened it was intended to provide therapeutic services to boys aged 10-13. In 2012, the age designation was changed to accommodate boys up to age 18. The Town of Coventry was not notified of this change. While the concept of a group home may seem honorable and well meaning, it can spin out of control if not well supervised, a situation Mr. Jonas called "creep factor." He has learned that the therapeutic designation no longer applies and the home is now considered to be a juvenile detention center. When a re-designation takes place, State law requires notice to the municipality of the change of license. He brought the matter to the Town Manager's attention and the Manager said he would get to the bottom of it. The Town sent a letter to DCF who said it was their mistake and wouldn't happen again. Mr. Jonas and his family have witnessed acts of violence and drug use due to their proximity to the home. Residents of the home have been connected to recent burglaries and other crimes. Other towns have been successful in closing group homes that do not comply with standards. He cited a similar situation at a group home in Vernon. The home was closed although it was not an easy task. Mayor Marmer of Vernon has offered her assistance. He knows the decks are stacked against municipalities but it can be done. Vernon pushed back and succeeded and he asks Coventry to do the same. In 2015 alone there were 62 emergency calls to Grant House. Something is grossly wrong with the supervision there. His family and

neighbors live with this every day. In response, Thomas Pope said he has heard that the supervisors of the home knew about residents' intent to burglarize in an incident that happened on September 8 2016. He asked if any charge been filed against the supervisors because he feels it should be. Mr. Jonas replied that he doesn't want to discuss that in an open forum. Mr. Pope said he would like to have the supervisors arrested for aiding and abetting.

4. **Acceptance of Minutes, September 6, 2016:**
   Motion 16/17-38: Thomas Pope moved and Matthew O'Brien seconded that the minutes of the Council meeting of September 6, 2016 be accepted. The following corrections were requested:
   - Page 4, Item 6C, tenses need to be corrected as the committee had received financial reports from the Board of Education and was not waiting for them by the time of the meeting.
   - Item F4, first line: change "Carried" to "Carrie."
   - Page 3, third paragraph, first line: change "historically there" to "historically he."
   - Page 6, item F1, second bullet, last sentence: change "meeting of the Board of Education" to "meeting with the Board of Education."

   Lisa Thomas asked to clarify that when there are questions about how things are said at Council meetings, we have a video to refer back to when making corrections. Julie Blanchard said yes. **The motion to accept the minutes as corrected carried on unanimous vote.**

5. **Consent Agenda:**
   Motion 16/17-39: Andy Brodersen moved to accept the Consent Agenda, seconded by Matthew O'Brien and unanimously approved.

6. **Reports:**

   A. Council Chairwoman – Julie Blanchard. Our Chief of Police has a meeting scheduled tomorrow with the administrators of the group home on Dunn Road, and Rep. Tim Ackert is also working on these issues. We plan to have him attend our next Council meeting. Julie also feels this is important and we will work on it as much as we can. John Elsesser mentioned that the Police Chief has already had one meeting with the group home administrators and another is scheduled for tomorrow. Tim Ackert has touched base with him several times.

   B. Council members:
   Lisa Thomas attended a Town-related activity yesterday for the Last Green Valley. It was their annual fundraiser. It was a great event and she encourages people to watch for it next year. Local growers and wineries were represented. The Last Green Valley also produces the Walktober series and a calendar of 2016 events is on the table.

   Hannah Pietrantonio attended a town event, the first annual Arts in the Park Festival, sponsored by the newly formed Coventry Arts Guild. It was well attended with poets, authors, music and artists. Kudos to the Arts Guild for a successful event.

   Thomas Pope said that after hearing Mr. Jonas' comments he wants to make a statement. When anyone buys a property they are buying certain rights including rights

to peace and quiet. Hearing how someone's rights have been abused is sad. He wants Mr. Jonas to know he is in his corner and he believes the right to peace and quiet trumps the rights of thugs to live in Coventry.

C. Finance Committee – Matthew O'Brien:
The first part of our meeting was a joint meeting with the Fiscal Committee of the Board of Education and their staff. We moved up an update from the School Building & Energy Efficiency Building Committee to hear their recommendations for the replacement or conversion of boilers/burners for the school complex as part of the CNG natural gas project. We will be discussing this item later on the agenda under item 8.D. We also discussed that CNG has indicated we should plan to hook up to gas in April of 2017 due to delays in getting permits from the State. This will allow the town to use the majority of the oil we have contracted for this year and will make the transition smoother due to better weather. We asked if the bids received for the boilers would be good through April and were told they would be. The Finance Committee recommends to the Council that the Building Committee's recommendations be accepted and that we authorize them to move forward with the process.

We then discussed the fiscal report request which was recently forwarded to the Board of Education requesting information about the 2015-16 fiscal year. Mike Sobol, Chairman of the Board's Fiscal Committee, reported that they interpret the Council's request as asking them to create new reports and summaries of existing reports. Mr. Sobol said that the cash disbursement report that the Council requested was a 753-page document and he reported that staff spent about 8 hours redacting information from that report before providing it to the Council. Mr. Sobol said that much of what is being asked for is discussed by the Fiscal Committee and by the Board at their meetings. Matthew O'Brien asked how that information is provided. He asked if the Fiscal Committee receives any additional documents or a financial report (such as the Council receives from Finance Director Beth Bauer each month) in conjunction with the reports that are presented. Mr. Sobol said if they have questions they ask them at their meetings. The Chair stated that little information is available in the Board's minutes or the Fiscal Committee's minutes. Mary Kortmann noted that only action items are required to be included in their minutes so these discussions are not there. Mr. Sobol stated that their staff does not have time to provide the information that the Council is requesting and that if Council members would like this information they can come to the Board's Fiscal Committee meetings or the Board meetings, or view the recordings of the Board of Education's meetings. Matthew O'Brien said that he was hoping we could get more detail from the Board without having to go to every one of their meetings. Mr. Sobol said that the Board's job is to manage education in the District and the Council's requests make it difficult to do their job. Matthew O'Brien replied that the Town Council has the job of approving the Board of Education budget and this is information we will need to do that.

We discussed the Council's offer to have the Board of Education join OpenGov and the Council's offer to pay for the install, training and first year's subscription cost. Mary Kortmann said the Board will be looking into this further. John Elsesser and Beth Bauer answered the Board's questions about the process and work needed to get OpenGov up and running.

We discussed the CHS walls project and John Elsesser noted we are actively seeking members for the building committee. Work cannot proceed until more members are

found.

We discussed several joint collaboration projects including VOIP and the advantages of belonging to ECHIP for our wellness and health insurance. We also discussed the Smart Start grants and the work completed by the Board to add another classroom to the preschool over the summer, as well as the continuing work of the School Building and Energy Efficiency Building Committee.

We also discussed the Municipal Spending Cap which has been imposed along with the creation of the MERS grant by the State. The cap requires municipalities that receive MERS funds to limit the growth in their total town budgets, with some exceptions, to two and a half percent. Exceeding that amount will result in a loss of $.50 in MERS grant money for every dollar the Town spends beyond the spending cap.

We also discussed the crumbling concrete foundations issue. The Town received an engineer's assessment of the potential impact to Coventry and it is estimated that Coventry will lose $59 million as a result of reductions to assessments.

Bill Oros, Chairman of the Board of Education, asked if the CCJEF court case had been settled. John Elsesser provided an update and we discussed whether the State might appeal the ruling. We will continue to monitor this issue closely.

Matthew O'Brien asked if the Board could provide details of their approved iPad replacement program which was passed after the 2016-2017 budget was approved. Mr. Petrone said they would be happy to provide the committee with final program details.

Mary Kortmann brought one of the most recent financial reports that were sent to the Council before Monday's meeting that the committee received at the table Monday night. The report, entitled "Highlights of 2015-16", details all of the expenditures the Board made during the year that were financed with surplus funds (*attached to these minutes*). There were a number of items that were purchased that appear in the Board's Capital Improvement Plan (CIP) and should result in a savings of future tax payments. The total of the surplus funds is $533,100. Mary Kortmann reported that all of these items were not in the 2015-16 budget and were funded from funds saved within that budget. Mary Kortmann also reported that their latest report reflects that they are showing a $148,000 projected loss right now due to recent special education placements. Staff and our two committees will work to set up future meetings. The Board Fiscal Committee left the meeting at that point.

Beth Bauer reported that as of September 6th our property tax revenues collected represent 55.56% of anticipated collections compared to 54.93% collected at this time last year. COVRRA collections are a little behind our collections from last year. General fund collections are at 42.01% of anticipated.

We discussed the need for additional funds to pay for additional expenses for the Lake Gate Repair STEAP project. John Elsesser reported that $25,000 is available from Lake Management Capital Funds and that up to an additional $31,850 may be needed to complete the project. It was noted that this amount includes contingency funds. The committee decided to recommend that the Council provide funds up to $31,850 from CNREF. This item will be discussed later on tonight's agenda.

8. **New Business:**
Motion 16/17-40: Hannah Pietrantonio made a motion to move up item 8A, 16/17-8: Presentation of Eversource 900 Line Rebuild Project, as the next item of business. The motion was seconded by Matthew O'Brien and carried on unanimous vote.

A. 16/17-8: Presentation of Eversource 900 Line Rebuild Project:
Eversource representatives Marcia Wellmann, Brian Ragazine, and Shawn Johnston were present to provide details about the Eversource 900 Line Rebuild project. Ms. Wellmann distributed copies of a presentation (*attached to these minutes*). She gave details regarding the need to replace poles due to rot and woodpecker damage that threatens the integrity of the grid. They are proposing to replace 3.8 miles of line with steel vs. wood. The new structures must be taller to meet the most recent reliability standards. The new height depends on topography with a maximum of 74.5 feet. Installation of access roads and crane pads has already taken place. Eversource thought the project wouldn't need a Siting Council permit but it does. They filed a petition with the Siting Council. If they receive the permit the plan is to begin construction in October. Work hours would be Monday – Sunday, 7 AM - 7 PM because they want to get it done. Someone will be available in the field to work with property owners to address questions or concerns. Matthew O'Brien asked if a public hearing is required. John Elsesser said it would have to be requested. Ms. Wellmann said the process doesn't automatically require it. John said the areas of largest impact have already happened. Tree removal is basically done - some tree trimming may still need to be done. What you see for the basic corridor is basically in place. The new frames will be in the same place. Eversource requested that the Town approve waiving the regulatory process but we didn't feel comfortable with that. He hasn't heard anything but fairly positive feedback from landowners, but that doesn't mean all issues have been addressed. Some abutters may have issues. Thomas Pope asked if this is the same project that was described as originally minor. John replied yes. We were originally informed that the project was clearing and grubbing. Thomas asked Ms. Wellman if that was true. She replied she wasn't involved at the time but she is sure if that is what John was told then yes. Thomas said he feels the scope of the project was deliberately hidden. Ms. Wellman replied she is not sure she agrees but will take that feedback. Lisa Thomas asked whether the project has impacted privately-owned residential property. Ms. Wellman said we have an easement and have used that easement. Lisa said in some cases it looks like entire roads have been created. She asked if property owners were notified of this level of work. John said we weren't expecting to see amosite. Ms. Wellman said that property owners can ask that the crane pads be soiled or seeded over. We prefer not to remove gravel. Matthew noted that the maximum structure is a third higher than the previous ones. He asked if Eversource can tell him how many of these taller poles there will be. Ms. Wellman said she can provide that information on a spreadsheet. Matthew said you can't tell how the height would affect the surrounding area. Ms. Wellman said she thinks it is subjective. There is still a substantial distance between the structures and people's lawns. Richard Williams asked why Eversource is here. Ms. Wellman said we were requested to come and make a presentation. Richard said the original scope of the project was so much smaller. It has ballooned out of control. Ms. Wellman replied that the original project was maintenance. It became a regulatory project due to new requirements for taller structures. She explained the background of the development of the Siting Council. Richard said so basically Eversource is going to do this project regardless. Ms. Wellman replied yes if we get State approval. The Town and residents can provide comments to the Siting Council. Richard said wouldn't that require a public hearing? John said he thinks people who are

directly affected are knowledgeable. He thinks they were shocked in the beginning as the project emerged and people driving by who see the cuts are somewhat stunned. The Town has limited authority but can take a role to make sure the people most affected are made happy to the extent possible, such as providing gates, etc. The key is they have given up their rights for an easement and there is a lot of State power to allow this to happen, and very little Town power to prevent it. We also need the electricity. He doesn't believe Eversource realized they had to replace the poles with taller ones when the project started. Ms. Wellman agreed. She said we needed to do at least two and decided to do them all to get it right. Julie Blanchard said she would like to get the Siting Council link on the Town website. Ms. Wellman said she can provide that information. A letter was sent to residents with contact information and we can provide it. Richard asked how many comments or letters have been received. Ms. Wellman replied none. There is one non-abutting property owner we have been in contact with. We have reached out to abutters at each stage of the project and will continue to do that. No negative letters have been sent to the Siting Council. One person is concerned but no work is taking place on his property. Matthew asked if any poles have been put in place yet. Ms. Wellman replied not until we receive approval.

Thomas Pope said we have had several hurricanes in the past, one of which caused great problems. Eversource (*then CL&P*) had to take out tons of trees and got horrible press. He has wondered why when trees are in the right of way why Eversource has failed to keep plantings down to a height below their lines. Why can't they provide examples of what kind of trees can be used for zoning? Shawn Johnston replied that we do have material out there – it is on our website – and he can get it to the Council. It makes recommendations for planting. Thomas replied he has seen that - his suggestion is to send it out to Planning & Zoning Commissions to be adopted so each town doesn't have to recreate the wheel. Shawn said he thinks that would be a good recommendation to come from the Council – he will offer to share it but he doesn't think it would be well received from the utility company. We sought approval to trim back but it only lasted about a year. In most cases we have to ask people for permission to cut a tree but we don't achieve 100% cooperation. We would be thrilled if all towns would pass zoning regulations for right-of-way plantings. Thomas said if you provided a template it would make it easier for the towns. The level of expertise from one town to the next varies greatly. Shawn said that might be an option with John Elsesser' s expertise and CCM collaboration, and that he appreciates the suggestion. Eversource officials departed the meeting.

Motion 16/17-41: Matthew O'Brien made a motion to move up item 8B, 16/17-9: Presentation of Transfer Station Location Study Report, as the next item of business. The motion was seconded by Richard Williams and carried on unanimous vote.

B. 16/17-9: Presentation of Transfer Station Location Study Report by Tim Wentzell, CT Property Engineering:
Tim Wentzell of CT Property Engineering and Public Works Director Mark Kiefer joined the meeting. Mr. Wentzell said the study was done in response to the Town's query about whether it is advisable to keep the transfer station at its current site or to consider other potential sites. We understand that Recreation might have a use for the current site. Matthew O'Brien asked whether that consideration was part of the underlying premise of the study. Mr. Wentzell said no. We were asked to evaluate the current site and potential new sites. He designed the original transfer station. It is beginning to show

its age and is beginning to deteriorate. There is going to be some significant maintenance required. The scale is getting old. There are likely to be more materials processed through the site as time goes on. The State may be mandating acceptance of more materials. The downside to the existing site is it is not centrally located. It is a little awkward to recycle motor oil because that is disposed of at DPW. We were asked to look at a secondary site at the treatment plant. It is across the street from the current site – so the same disadvantages exist, plus an access road would be needed. The topography of the site is adequate. It would work for roll-off dumpsters. The current dumpsters are getting taller and this is likely to increase. The site is useable. Land would need to be purchased. It would allow space for leaves and storm-related brush. The third location is adjacent to the Public Works facility. We would also need some land purchased but the roadway would be quite short because it is adjacent to Public Works. The topography is adequate. This location would potentially solve the problem of oil/antifreeze disposal. The piece of land is big enough for the transfer station and disposal of leaves/brush. It is more centrally located and would be easier to manage things such as cash handling, supplies, electricity, bathrooms, etc. It would eliminate the need for a dedicated backhoe for compacting. Long term it is probably the best site. It would seem like local permits would be easily approved. The road into DPW is relatively isolated. It wouldn't really back up to anybody and we can do a reasonable job of shielding the area as is done at the current site. It is not a high-volume operation - about 40 cars come on Thursdays, maybe a few more on a Saturday. Traffic may increase a little more over time but curbside pickup reduces traffic. We were also asked whether it continues to make sense to use a scale. Coventry is one of a few towns in the region that still uses one. There are some advantages because it stops a lot of arguments, but most towns have an established system where they charge a certain dollar amount for a pickup load. Mr. Wentzell asked if the Council had any questions.

Thomas Pope said he is used to using a busy transfer station in another town. He noted the schematic for the location near the Public Works garage has two sliding gates. Why not have one at the entrance rather than two? Mr. Wentzell replied the schematic says it is optional. Thomas said it looks like the roll-offs are parallel rather than perpendicular. This seems inefficient and makes it more difficult to pick up the roll-offs. People need access to the end. Mr. Wentzell replied people need to dump end to end, not all at one end. Maybe the ones Mr. Pope has seen are compacting units. You do go to the end of those but for something like brush you go to the side to fill it as much as possible. There are no compactors at the current facility and they don't handle refuse. It doesn't mean that won't change but once a town has curbside pickup they rarely go back. John Elsesser recalled the length of lines at the transfer station in previous years – that was one reason why we went to curbside pickup. Matthew noted that the cost is twice as much and asked if it will be more efficient. Mr. Wentzell said we can do some upgrades to the existing facility. Management being several miles away will always be an issue. The current site has enough space to upgrade. Regarding numbers, the estimate doesn't include land acquisition costs or final design. Julie noted this matter will be referred to committee – and asked if Steering can discuss it at their next meeting. Thomas Pope replied yes. John Elsesser noted the matter is not urgent. Hannah Pietrantonio said with the role of the transfer station changing if the existing area can still maintain all of that. Mr. Wentzell replied within reason. Coventry picks up mattresses at curbside. In most other towns people have to take them to the transfer station. John noted it does cost us money. It would be cheaper if people brought them there. The State may prohibit them going into the landfill in the future. The State has developed a new materials handling system where their goal is to go to 60%. The only way we will hit that is mandatory

vegetable matter. That would change the nature of the transfer station. Mr. Wentzell said things like carpet would go in. They may make asphalt count. The State is getting more and more into consumer responsibility. More and more towns are taking paint and stain. Requiring more plant and vegetable matter will change the nature of the station. Coventry has the simplest system with leaf composting. It is static not stirred. Some towns have more elaborate systems. Matthew asked what other towns do for oil, etc. Mark Kiefer replied they take it at their transfer stations and have to pay to dispose of it. We want waste oil for our waste oil furnaces. Having the ability to take more oil at the transfer station would be good. The issue is you have to pay someone to transport it. It is hazardous waste and we are not licensed to do that internally. We could probably transport 50 gallons at a time in our diesel vehicle. Matthew asked how much we get in a year. Mark replied 2000 gallons of waste oil – we burn it all, and maybe 500 gallons of antifreeze. Our goal is to reuse the tank that was at the firehouse – it gives us an additional 1000 gallons at the facility. Mr. Wentzell said a lot of surrounding towns have oil/antifreeze tanks at their transfer stations. Some burn it. Technically you are supposed to be a licensed hauler to do that. Andy Brodersen asked if a new transfer station would have an effect on the value of surrounding property, or use of surrounding property. Mr. Wentzell said it would depend – the two sites we looked at don't have a lot of surrounding property. You can't see it from a distance and not a lot of noise is generated. Matthew asked if there has been any preliminary discussion to see if the land is available. John replied we have had brief discussions and can discuss this at another time. Matthew said when the Finance Committee reviews this we can't use these numbers as anything concrete. Mark said the land is not included but the other numbers are fairly reliable. Matthew asked if there is anything we can do to get a better handle on the numbers. Mr. Wentzell said once you select the site we would do final design – it doesn't make sense to do it otherwise. Matthew asked if there is anything we can do to narrow the selection. John said we estimate a $20,000-$30,000 variance. There would be some moving of material. Mark noted we built the site for a scale. Personally he likes using a scale because it is much more detailed. Richard asked if DPW has skill to build it, and if so, can it be done at their leisure? Mark replied we have the skill but there is an impact created by every new project. It is a balancing act. If we time it right where we are working during a mild winter we could get the excavation done for example. We could certainly work up a number. We would have to rent an excavator and hire somebody to put together the plan. It would be a great project. He thinks the biggest thing is acquiring the land. Lisa said she hopes to have another DPW person in the next budget too. Mark said he thinks the project would take about a year. Use of the current site for recreation was discussed. John Elsesser indicated that the girls' softball recreation league has begun to demand a field. It raises rights issues. They want access to bathrooms and advertising that they can't get at the school fields. This is a new issue that came up about a month ago. Sports go through various wax and wane periods and girls' softball is strong right now. The Council thanked Mr. Wentzell and Mr. Kiefer for the presentation.

Motion 16/17-42: Hannah Pietrantonio made a motion to move up item 8C, 16/17-10: Road Bond and Summer Road Work Update, as the next item of business. The motion was seconded by Matthew O'Brien and carried on unanimous vote.

C. 16/17-10: Road Bond and Summer Road Work Update: Mark Kiefer, Director of Public Works:

Mark Kiefer distributed a revised copy of the road report that contains corrections (*attached to these minutes*). He noted that some types of work cost more than others.

The report shows the cost per mile, which is a good gauge going forward to get our roads back in shape and keep them in shape. Highlights include:

- Extensive drainage and apron reconstruction in the Mt. Ridge area impacted the cost of that project. Over 50 catchbasins were addressed.
- Use of cold mix on lesser-traveled roads such as Bellevue. We took State millings and reused them as asphalt product to make the cold mix. We are proud that we were able to take 300 tons of millings off South Street, screen and reuse it. Use of cold mix on the right road is very cost effective. It won't hold up on high traffic areas.
- Cross Street: A 2.5" binder course was laid in preparation for the LotCIP project to start in fall or spring. Road width had a lot to do with the cost per mile.
- Phase one of Village roads included binder and will be finished next spring. This was done purposefully - a lot of underdrain work was done and we will go through winter to see if there is any settling. In spring we will raise the catchbasins and do overlay. A similar process was done last year and there were no failures.
- Waterfront Heights: We graded gravel roads and made minor drainage improvements. Cold mix asphalt overlay and chip seal were done. We won't have to maintain gravel roads there in the future and residents are happy.
- Shimming on roads – people have probably experienced bumps in the road from keyways that were cut in preparation for shimming. We are about a third of the way done and hope to finish soon. We had problems with the paving box and rain shut us down today. We will be back at it tomorrow. We are only overlaying sections of roads that need it. We will finish with chip seal next year. This is a very cost-effective approach.
- South River from Stonecroft Lane to South St. has been addressed and we are happy to have it done. It was one of the worst roads in town.
- The Town crew did a lot of prep work and drainage work in advance of road repair. They also rebuilt 15 catchbasins on other roads where there were failures. When one or two catchbasins go in an area, you will continue to see it because it is a lifecycle issue. That is starting to happen in several areas as outlined in the report.
- We crack sealed 6 miles of roadway in preparation for chip seal next year or future road work.15.2 miles of roadway received major reconstruction in 2016.
- Work proposed for 2017:
    - Chip sealing on 12 miles of road as outlined in the report. Town forces will prep and make drainage improvements to prepare for chip seal through the State bid. We hope to do that between now and when snow flies and next spring. Chip seal is best done in July.
    - Shimming on 7 miles of road as outlined in the report. Town crew to make drainage repairs and prep roads. Some association roads are gravel and we may want to address them.
    - Bituminous asphalt overlay on .4 miles, Bradbury Lane and Cross Street. We hope to do this in May to get a contractor in place. We will see how the LotCIP project progresses and hope to finish in 2017.
    - South Street drainage project at Nathan Hale Homestead: There is open drainage along the road that is fairly deep and makes for difficult pedestrian traffic to the farmers' market. John Elsesser noted we are also losing the edge of the road - it is collapsing. Mark said the section from Homestead to Skinner Hill has not been worked on. We don't think we

have enough funding to do that next year – we propose to do drainage next year and reconstruction in 2018.

- Crack seal: 5 miles in preparation for overlay or chip seal. We like to do this when the asphalt is cold.
- The total proposed roads program for 2017 is $668,367. This is more than we have typically budgeted for. John noted it will be floated over two budget years but we need to be cognizant of annual calendars.

Thomas Pope asked about the difference in mileage for bituminous asphalt shimming. Mark replied we add up all the roads – we are patching in, not doing the entire road length. The number is fine-tuned when we actually mark the road. It takes about a week to walk the road and fine-tune the figures. The State bid price may change a bit and we won't know until we actually mark the road. This section is more of an estimate. The first section is completed.

In closing, Mark Kiefer said he thinks the road bond was a great success. Our crew really stepped up – but the volume of work put a lot of pressure on the Town Engineer. Local contractors also really stepped up and we had good weather. Addressing 15.2 miles of road in 4 months is a lot of road work. John Elsesser said at one point we had 3 paving contractors and four crews on jobs at one time. That is a lot to coordinate. Mark said DPW is behind in other areas such as roadside mowing and catchbasin cleaning. There is always a cost on the maintenance end when a special project done. He thinks it was worth the effort and we are working to catch up. We saved about 20% in the process. Matthew complimented Mark on the Mt. Ridge project, saying it was a fantastic job and completed ahead of schedule. Mark replied it is rewarding to sit back and think about everything that was accomplished. The Council thanked Mr. Kiefer for his report.

6. **Reports:**

E. COVRRA – John Elsesser: no report.

F. Town Manager – John Elsesser:

1. Projects: Regarding the CCJEF court case, the State did file an appeal. The Judge has 7 days from last Thursday to decide whether to grant it or not. It will be interesting to see whether it is granted. We have gotten all approvals and signed the contract to start the STEAP sidewalk project from the middle school to Ripley Hill. It should start this week. The CCM convention is coming up. If any Council members are interested in attending let John know. John, Noel Waite and a representative from Halloran & Sage will be attending a hearing on the ambulance PSA – it was revised so we only have to go one day instead of two. No objections were filed so hopefully it will be pro forma and we can move ahead. There is a Solarize Coventry workshop this week. Eversource is planning to replace the rest of our streetlights with LED lighting. This will change the temperature of the lights to 300 degrees Kelvin, which means they will be a little less blue. The AMA came out with warning that blue LED lights can cause seasonal affective disorder because people can't sleep properly. Eversource will also replace the 40 lights they already put in as part of the pilot program.

   Julie Blanchard asked if there is more information about the consortium for WPCA. John replied they haven't set a date yet. They are still working out issues. There is a CERC presentation at the Economic Development Commission

meeting on Thursday which will be an opportunity - one member of WPCA will be there. We will hear about potential projects.

2. Lowering of Coventry Lake: We are trying to get the lake lowered to get a contractor to start October first on the lake gate repair project. We will continue to lower the lake to the lowest possible point. This will be discussed at tomorrow night's lake forum, 7 PM at Patriots Park Lodge.

8. **New Business:**

D. 16/17-11: Discussion/possible action: Authorization to proceed with CNG natural gas conversion project with bid alternate approach for five new boilers and two new burners with low bidder M.J. Daly: John Elsesser outlined recommendations made by the Building Committee in a memo from BL Companies (*attached to these minutes*). The Council Finance Committee agreed with the Building Committee to take the alternate bid approach, replacing boilers in the high school and middle school, and converting the burners in the Complex. We want to make sure the whole Council is on board and if so we will negotiate the contract with the later date. Matthew O'Brien noted that the payback on buying all new boilers was more than 30 years and didn't make sense - Finance agreed wholeheartedly with the Building Committee. The issue of rebates was discussed. John Elsesser said after rebates the cost is $426,450. Where the money comes from is the second phase. What we need to do next is get a schedule of values so we know what the conversion burners are. Then we can see how we want to pay for it. We could lease purchase the whole amount and it would come out of CNREF. He recommends trying to determine how much the conversion burners and piping are and paying cash to minimize reduction in CNREF. We have enough money now but no one wants to totally empty it. The Council did put another $200,000 there in anticipation of this project.

Motion 16/17-43: Matthew O'Brien moved to authorize the Town to move forward with accepting the bid for the CNG gas project using the alternate approach for new boilers at the high school and middle school, and conversion burners in the Complex, with low bidder MJ Daly. The motion was seconded by Thomas Pope and carried on unanimous vote.

E. 16/17-12: Discussion/possible action: transfer of $25,000 from Lake Management Capital Funds and supplemental appropriation of up to $31,850 for additional expenses for the STEAP Lake Gate Repair project: John Elsesser noted that we probably shouldn't have used the word "transfer" because it is an appropriation from capital. Flyboards don't seem to be a big issue this summer – the change in law may have affected that and they don't seem to be in the lake this summer as much. The State chose not to pay for the portion of that study. Bids for the lake gate project came in and we would like to get going.

Motion 16/17-44: Matthew O'Brien moved to allow the Town Manager to use $25,000 from the Lake Management Capital Funds and up to $31,850 from CNREF for the STEAP Lake Gate Repair Project. The motion was seconded by Andy Brodersen and carried on unanimous vote. Matthew said it should be noted that almost $30,000 of this is contingency.

10. **Executive Session:**

Motion 16/17-45: Matthew O'Brien moved that the Town Council enter into Executive Session at 9:42 PM pursuant to Connecticut General Statutes 1-

200(6)(E)-discussion of any matter which would result in the disclosure of public records or the information therein contained described in sub-section (b) of Section 1-210 with the following people in attendance: Town Council members and John Elsesser. The motion was seconded by Richard Williams and carried on unanimous vote.

Motion 16/17-46: Richard Williams moved to leave Executive Session at 10:00 PM. The motion was seconded by Andy Brodersen and carried on unanimous vote.

11. **Adjournment:**
    Motion #16/17-47: Thomas Pope moved to adjourn the meeting at 10:01 PM, seconded by Matthew O'Brien and unanimously approved.

Respectfully submitted,

Laura Stone
Town Council Clerk

Note: These minutes are not official until acted on by the Town Council at its next regular meeting. Those meeting minutes will reflect approval or changes to these minutes.

ATTACHMENTS

MARY KORTMANN REMARKS:

I would like to address my remarks to the taxpayers and parents of the town.

I am speaking as a citizen with knowledge of Board of Education activities, since only the chair can speak for the Board.

The Board of Education is comprised of 7 members elected by the voters of Coventry.

As required by state law 10-222, a Board of Education must maintain good public elementary and secondary schools, manage the money appropriated by the town for education and provide a properly maintained and safe school setting.

The management of the board budget, which is a planning document, is a complex process that takes time and effort to understand. The expenditures of the board must be adjusted as the year goes on, since as opposed to managing widgets or even roads that stay put, the children in the district move in and out and their needs change year to year and even within a school year. The Board of Education has twice monthly public meetings that are televised and as well as public subcommittee meetings. Our minutes and agendas with attachments are available on our website after the meeting. Taxpayers are always welcome to attend meetings, speak at audience of citizens and email questions. The board will attempt to answer questions within the limits of staffing or point the taxpayer to existing reports that answer their questions. Taxpayers will be better informed by getting their questions answered by the elected education officials that have worked with the information rather than having the information interpreted by others.

To address some specific points mentioned in the town newsletter.

The Board of Education requested that the town put $150,000 (.6% of the budget) of funds from our operating budget that were unexpended due to good management and luck into the Board of Education's non-lapsing account. These funds are to be used according to the Memorandum of Understanding that exists between the town council and the school board. Thank you to the town council for acting on that request.

The Board of Education forwards its reports to the town regularly following the meeting in which the reports are discussed. Since we had no July meeting, the end of June and July reports were both forwarded on August 12th, which to most people is before mid-month.

The Board of Education has never decided not to participate in the Open-Gov platform. The conversion and ongoing license was never in the board budget. In their June 20, 2016 meeting, the town council authorized picking up the $7000 cost for the conversion and maintenance. The board thanks them for that, and will take up looking at the level of difficulty involved when staff has finished their legal requirements for filing end of year reports and participating in the annual audit. The Board would also like reports on monthly unique users, since the product may be a lot of money for the benefits. As a point of information, the town staff took 18 months from the time the product was voted by the council to when they finally went live for taxpayer use.

Thank you for your time.

Good evening. My name is Gene Marchand, I live at 46 John Paul Lane. I am a 19 year resident of Coventry and a four term member of the Board of Education.

I am speaking tonight in response to seeing the Fall Newsletter that was recently sent out to Coventry residents. The lead article from the Council Chairwoman seems to imply that the Coventry Board of Education has not done a good job in managing the funding allocated to our Coventry schools … and has withheld financial information.

This couldn't be further from the truth. The BOE consists of 4 Republicans and 3 democrats. Our Chairman is a Republican and a retired Superintendent of schools. My experience over the past 5 years has been that this BOE has been totally bi-partisan, in fact non-partisan.

Every decision that has been made has been based on what individual members felt was best for kids and their education. There have been NO decisions made based on party affiliation …… something that all elected officials should consider and strive for.

The Coventry school budget totals more than $27 million dollars. During budget deliberations, BOE members spend many hours scrutinizing every line item, ask many questions and make multiple adjustments. This is our statutory obligation as elected members of the Board of Education.

A budget is a "planning document" and as such there are many "moving parts". Items like healthcare costs, fuel and heating oil and special education placements are always best estimates. The board members in consultation with the school administration, refines and accepts the best estimates based on all fact available.

The BOE budget is audited every year ….. just like the town budget and by the same firm.

The Coventry BOE has consistently submitted some of the lowest percentage increases of any town in the state. In fact, according to State Dept. Of Education data, in a 33 town grouping of towns similar to Coventry in population and socioeconomic factors, Coventry is **28th** out of 33 in per pupil expenditures. Only 5 towns in this grouping spend less and yet we have a high functioning school system with rising test scores, state of the art technology training, a preschool, full day kindergarten and a glowing NEASC evaluation on our high school.

Area school systems are now looking to Coventry for guidance on how we achieved these outcomes.

One of the most important responsibilies for any city or town is to provide a quality education for its children. I can say with extreme confidence that I believe this board of education is doing that ….. and doing it in the most cost effective manner.

I'm proud to be an elected member of a governmental body that takes its responsibilities seriously, a body that believes in a culture of respect for individual ideas and opinions and a governmental body that makes decisions irrespective of political ideology.

Our decision are made based on what's best for the children of Coventry and most cost effective for our taxpayers. This school administration and the BOE members have been totally transparent in these endeavors and will continue to be. Any suggestions to the contrary are misguided and misinformed.

Finance Committee meeting of September 12, 2016

The first part of our meeting was a joint meeting with the Finance Committee of the Board of Education and their staff.

We moved up an update from Mr. Tom Kolodziej, Chairman of the School Building & Energy Efficiency Building Committee to receive his report and the committee's recommendation following the committee receiving bids for the replacement or conversion of boilers/burners for the school complex as part of the CNG natural gas project. Tom reported that the committee recommends that we replace the two boilers at the high school and the two boilers at the middle school – all of which are over 50 years old – and converting the other two in the connecting wing. We will be discussing this item later in the agenda under item 8.D 16/17-11. We also discussed that CNG has indicated that we should plan to actually hook up to the gas in April of 2017 due to delays in getting permits from the state. We discussed how this will allow the town to use the majority of the oil by April that we have contracted for this year and will make the transition smoother due to changing over in better weather. We also asked if the bids for the boilers that we received would be good through April and we were told that they would be.

The committee recommended to the Council that the Building Committee's recommendation be accepted and that we authorize them to move forward with the process.

We then discussed the Fiscal Report Request which was recently forwarded to the Board requesting information about the 2015-2016 fiscal year.

Mike Sobol, chairman of the Board's finance committee reported that they interpret the Council's request as asking them to create new reports and summaries of existing reports. Mr. Sobol said that the cash disbursement report that the Council had requested was a 753 page document and he reported that staff spent about 8 hours redacting information from that report before providing it to the council.

Mr. Sobol said that much of what is being asked for is discussed by the Finance Committee and by the Board at their meetings. Matt O'Brien asked how that information is provided. Does the Finance Committee receive any additional documents or a Finance Director's report (as the Council receives from Beth Bauer each month) in conjunction with the reports that are presented. Mr. Sobol said that if they have questions they ask them at their meetings. The chair stated that little information is available in the Board's minutes or the Finance Committee's minutes. Mary Kortmann noted that only action items are required to be included in their minutes so these discussions are not there. Mr. Sobol stated that their staff does not have time to provide the information that the Council is requesting and that if Council Members would like this information they can come to the Board's Finance committee meeting and the Board meetings or view the recordings of the Board of Education's meetings. Matt O'Brien said that he was hoping we could get more detail from the Board without having to go to every one of their meetings. Mr. Sobol said that the Board's job is to manage education in the District and the Council's requests make it difficult to do their job. Matt O'Brien replied that the Town Council has the job of approving the Board of Education budget and this is information we will need to do that.

We then discussed the Council's offer to have the Board of Education join OpenGov.com and the Council's offer to pay for the install and training and the first year's subscription cost. Mary Kortmann reported that the Board will be looking into the possibility further. John Elsesser and Beth Bauer answered the Board's questions about the process and work needed to get OpenGov up and running.

We then discussed the CHS walls project and John Elsesser noted that we are actively seeking members for the building committee and that work cannot proceed until more members are found.

We discussed a number of joint collaboration projects including the VOIP project, the advantages and benefits of belonging to ECHIP for our Wellness and Health Insurance, the Smart Start grants and the work completed by the Board to add another classroom over the summer, and the continuing work of the School Building and Energy Efficiency Building Committee . More details of these discussions can be found in the minutes of the Finance Committee meeting.

We also discussed the Municipal Spending Cap which has been imposed along with the creation of the MERS grant by the State. The cap requires municipalities that receive MERS grant funds to limit the growth in their total town budgets (with some exceptions) to 2 1/2 %. Exceeding that amount will result in a loss of $.50 in MERS grant money for every dollar the town spends beyond the 2 ½% municipal spending cap.

We also discuss the crumbling foundations issue after the town received an engineer's assessment of the potential impact to Coventry that said it is estimated that Coventry will lose $59 million reduction in our assessments as a result. John Elsesser provided us with an update and more details – which can be seen in the Finance Committee minutes.

Bill Oros, Chairman of the Board of Education, asked if the CCJEF court case had been settled. John Elsesser provided and update and we discussed the probability that the state would appeal the ruling and that we will continue to monitor this issue closely.

Matt O'Brien asked if the Board could provide the committee with the details of their approved iPad replacement program which was passed after the 2016-2017 budget was approved. Mr. Petrone said that they would be happy to provide the committee with the final program details.

Mary Kortmann brought one of the most recent financial reports that were sent to the Council before Monday's meeting and that the committee received at the table Monday night titled "Highlights of 2015-16" which details all of the expenditures the Board made during the year that were financed with surplus funds. There were a number of items that were purchased that appear in their Capital Improvement Plan (CIP) and should result in a savings of future tax payments to fund those projects.

The total of the surplus funds is $533,100. I am passing out a copy of this document to the Council. Mary Kortmann reported that all of these items were not in their 2015-16 and were funded from funds saved within that budget.

Mary Kortmann reported that their latest report reflects that they are showing a $148,000 projected loss right now due to recent special education placements.

Staff and our two committees will work to set up future meetings. The Board's Finance Committee left the meeting at that point.

Beth Bauer reported that as of September 6th our property tax revenues collected so far this year represent 55.56% of anticipated compared to 54.93% collected by this time last year.

COVRRA collections are a little bit behind our collections from last year.

Our General Fund collections are at 42.01% of anticipated.

We discussed the need for additional funds to pay for additional Expenses For the Lake Gate Repair STEAP project. John Elsesser reported that $25,000 is available from Lake Management Capital Funds and that up to an additional $31,850 may be needed to complete the project. It was noted that this

amount includes contingency funds. The committee decided to recommend that the Council provide funds up to $31,850 from the CNREF. This item will be discussed further under item 8.E 16/17-12 on tonight's agenda.

Highlights of 2015-16

Transfer to Reserve Fund for Capital Expenditures	150,000
Security/Entryway Access Points (Remove from CIP, part of School Energy Project)	108,250
CNH Gym Floor Replacement (Remove from CIP)	85,800
DW VoIP (Remove from CIP, part of School Energy Project)	50,500
Energy Conservation Loan Pay-Off	40,600
DW Security Camera Upgrades (Remove from CIP, part of School Energy Project)	21,500
LMC Rooftop Compressor Failure	21,400
DW Equipment Alarms & Monitoring	19,950
Electric Vehicle & Charging Station	11,000
Admin Bldg HVAC Balancing	8,000
HEEC Exterior Painting	4,500
CNH Choral Risers	4,000
YE Unexpended Funds	7,600
Total	533,100

EVERSOURCE ENERGY

900 Line Rebuild

Town of Coventry Briefing

September 19, 2016

Agenda

EVERSOURCE ENERGY

- Project overview
- Project status
- Points of Contact

Project Overview

EVERSOURCE ENERGY

- Eversource has identified the existing 69-kV 900 Line as being in need of replacement based on the condition of the existing structures (woodpecker damage, rot, and overall deterioration).
- The condition of the structures can jeopardize the physical integrity and continued reliability of the 900 Line.
- The portion of the 900 Line proposed for rebuild is approx. 3.8 miles long between the Skungamaug Substation on River Road and Mansfield Junction with off of Stonehouse Road and would cover about 40 structures.
- Existing wood structures are to be replaced with weathering steel structures which must be taller in order to be in compliance with the 2012 NERC clearance standards, The old structures are between 38.5 feet and 56.5 feet tall and the new structures will be between 52 feet and 74.5 feet tall. Structure height is dependent on the topography and the distance between structures.
- New wire will be installed and energized at the same voltage – 69-kV.
- The installation of the access roads and the crane pads has already taken place.
- Construction sequence would be to take down the old structure and wire, install the new structure, string wire, and than energize the line.

Cross Section

EVERSOURCE ENERGY

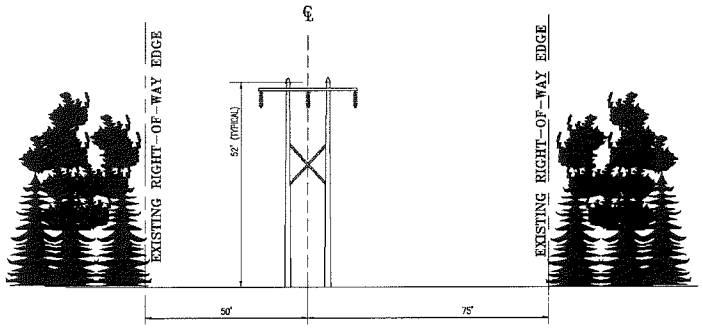

EXISTING R.O.W.

STANDARD WOOD H-FRAME STRUCTURE

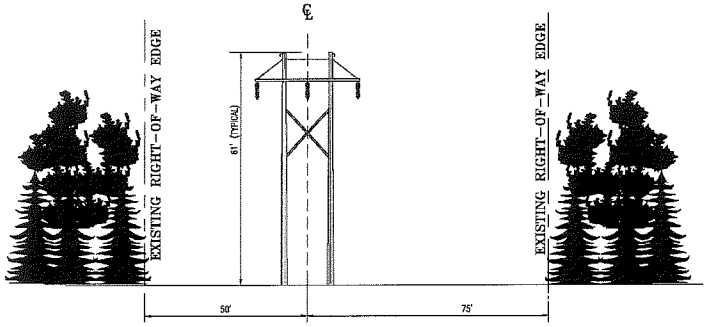

PROPOSED R.O.W.

STANDARD LIGHT DUTY (LD) H-FRAME STRUCTURE

	EXISTING		PROPOSED	
	OVERALL LENGTH (FT)	ABOVE GROUND HEIGHT (FT)	OVERALL LENGTH (FT)	ABOVE GROUND HEIGHT (FT)
MAX STRUCTURE HEIGHT	65'	56.5'	85'	74.5'
AVG STRUCTURE HEIGHT	60'	52'	70'	61'
MIN STRUCTURE HEIGHT	45'	38.5'	60'	52'

NOTE 1. ACTUAL STRUCTURE HEIGHTS PER PLAN AND PROFILE.
NOTE 2. REFERENCE DRAWING

NO.	DATE	AS BUILT REVISIONS	BY	CHK	APP	APP
A	7/7/16	ISSUED FOR 70% REVIEW	MJP	BAF	GEL	

EVERSOURCE ENERGY

TITLE: LINE 900
STRUCTURE 6590 TO SKUNGAMAUG S/S
TYPICAL ROW CROSS SECTION

BY	MJP/TRC	CHKD	BAF/TRC	APP	GEL/TRC	APP	
DATE	7/7/16	DATE	7/7/16	DATE	7/7/16	DATE	
H-SCALE	N.T.S.	SIZE	ANSI B	FIELD BOOK & PAGES			
V-SCALE	N.T.S.	V.S.		B.L.DWG.			
R.E. PROJ. NUMBER				DWG NO.	260015-T0002-SH1		

ES VER: 05/2015

7/7/2016 2:58 PM - mpoulin - C:\pwworkingemp\pw1\gluszczki\d1706238\260015-T0002-SH.1.dwg - AS-BUILT

Project Status/Schedule

EVERSOURCE ENERGY

- August 2016 – File a Petition with the CT Siting Council, copy to be provided to the town, letter will be sent to all abutting property owners
- October 2016 – CSC Decision
- October 2016 – Construction begins, work hours are expected to be Monday through Sunday, 7 am to 7 pm
- Year End 2016 – Construction and restoration complete

Contact Information

EVERSOURCE ENERGY

For municipal officials:

Marcia Wellman

Siting & Construction Services

860.728.4547

marcia.wellman@eversource.com

For the public:

Transmission Information Line 800.793.2202

Email: TransmissionInfo@eversource.com

Summer Roads Report 2016

Full Depth Reclamation with Bituminous Asphalt Overlay - 2.7 Miles:

Mountain Ridge Subdivision:

Reclaimed, drainage, curbing and aprons, 4" Bit (1.5 mi.) = **$589,890** ($393,260/mi.)

Maple Drive (Lakeview Terrace):

Reclaimed, drainage, sewer, curbing, aprons, 4" Bit (.2 mi.)= **$49,393** ($246,965/mi.)

Homestead Drive (Actors Colony):

Reclaimed, drainage improvements and 4" Bit (.3 mi.) = **$68,300** ($227,667/mi.)

Bellevue Drive (Bellevue Estates):

Reclaimed, underdrain, 4" cold mix with chip seal (.2 mi.) = **$32,152** ($160,760/mi.)

Bradbury Lane and Mason Street (Village):

Reclaimed, drainage improvements, Bit Overlay (.3 mi.) = **$87,330** ($291,100/mi.)

Cross Street (GHR to South St):

Reclaimed, drainage, 2.5" binder, curbing, aprons (.2 mi.) = **$58,760** ($293,800/mi.)

Bituminous Asphalt Overlay - 3.1 Miles:

South Street (Rotary to Judd Road):

Milling - 1.5", full depth patch with 2" Bit Overlay (.8 mi.) = **$165,870** ($207,338/mi.)

Wall St., Mason St., Prospect St. and Bradbury La. Binder (Village):

1.5" Bit overlay with tack coat, curbing and aprons (.9 mi.) = **$124,262** ($138,068/mi.)

Woods Lane (Village):

Reclaim, drainage, curbing, aprons, 4" cold mix, C.S (.2 mi.)=**$24,642** ($123,210/mi.)

Waterfront Heights:

Edgemere Road, Beverly Trail, Lynnbrook Trail, Sycamore Trail, Kingswood Trail, Maplewood Trail, Knollwood Trail.

Gravel roads graded and minor drainage improvements completed by Town DPW.

Grading, 4" Cold mix asphalt overlay, chip seal (1.2 mi.) = **$136,140** ($113,450/mi.)

Bituminous Asphalt Shimming - 6.7 Miles:

Portions of the following roads were full width (both lanes) shimmed 1.5 inches compacted in preparation for a Chip Seal finish course in 2017:

1.) Brewster Street

2.) Grant Hill Road

3.) North River Road (Rt. 31 to Rt. 44)

4.) Cedar Swamp Road (Bolton Branch to Vernon Branch)

5.) Springdale Road

6.) Sean Circle and Oak Leaf

7.) Hickory Drive in Waterfront Manor

Town forces made drainage repairs and prepared roads for full width shimming to be done by State Bid Contractor. A total of 3250 ton of Class 2 bituminous asphalt with tack coat will be put in place by State D.O.T. Contract @ $95/ton including Tack coat and keyways. Total Bituminous Shimming (6.7mi.) = **$308,750** ($46,082/mi.)

Cold in Place Recycling with Bituminous Asphalt Overlay - 2.7 Miles:

South Street (Silver Street to South River Road):

C .I. P., drainage, curbing, aprons, 2" Bit Overlay (1.5 mi.) = **$309,532** ($206,354/mi.)

Drainage improvements and prep work completed by the Town DPW Crew.

South River Road (Stonecroft Lane to South Street):

C. I. P., drainage, curbing & aprons by DPW, 2" Bit (.4 mi.) = **$74,634** ($186,585/mi.)

Case Road and South River Road (Case Rd. to Talcott Hill Rd.):

C. I. P. drainage, 2" cold mix, C.S., curbing, aprons (.8 mi.)=**$125,034** ($156,293/mi.)

Catch Basins Rebuilt:

Contractors and the Town DWP Crew rebuilt catch basins for roads to be repaired in future Summer Road Programs: Lancaster Road, Ridgebrook Drive, Satari Drive, Wrights Mill Road, Swamp Road, Fitzgerald Drive, Ross Avenue, Echo Drive, North Ayers Road, Paden Road, Laurel Trail, Coventry Middle school. A total of 15 catch basins were rebuilt at a total cost of **$35,980.**

Crack Seal - 6 Miles:

A total of 6 miles of town roadways were Crack Sealed in 2016 in preparation for roads to be paved or chip sealed in 2017. Crack seal... **$49,800**

15.2 mi. of town roadways received major reconstruction in 2016.

Summer Roads 2017 (Proposed)

Roads to be Chip sealed - 12 Miles:

1.) Grant Hill Road
2.) Flanders Road
3.) Flanders River Road
4.) Springdale Avenue
5) Brewster Street
6.) North River Road (Rt. 31 to Rt. 44)
7.) Cedar Swamp Road (Bolton Branch to Vernon Branch)
8.) Cedar Swamp Extension
9.) Babcock hill extension
10.) CVFA Parking lot

Town forces will prep, make drainage repairs to prepare for the State Bid Chip Seal @ $1.50 sq. yd. (145,000 sy. = approximately 12 miles) = $216,000

Total Chip Seal to be completed in 2017 (12mi.) = $216,000 ($18,000 mi.)

Asphalt Bituminous Shimming - 7 Miles:

Portions of the following roads will full width (both lanes) shimmed 1.5 inches compacted in preparation for a Chip Seal finish course in 2018:

1.) Daly Road
2.) Broadway (North Farms to Carpenter Road)
3.) Richmond Road
4.) Antrim and Lancaster Road
5.) North Farms Road and Barbara Drive
6.) Satari, Zeya and Noor Drive
7.) Ridgebrook Drive
8.) Priority Town Road in Actors Colony
9.) Priority Town Roads in Waterfront Manor

Town forces will make drainage repairs and prepare roads for full width shimming to be done by State Bid Contract. A total of 3250 ton of Class 2 bituminous asphalt with tack coat will be put in place @ $95/ton including Tack coat and keyways.

Total shimming to prep for chip seal in 2018 = $308,750 = ($44,107 mi.)

Bituminous Asphalt Overlay - .4 Miles:

Bradbury Lane and Cross Street:

Town DPW Crew will raise basins to prepare for final overlay = **$56,867** (142,168)

South Street Drainage Project at the Nathan Hale Homestead:

Drainage project (5 - C.B. and 1100' 18" pipe) including a stone dust walkway for pedestrian traffic to the Farmers Market = **$36,750**

.75 mi. of Reconstruction (Homestead to Skinner Hill Rd.) to be completed in 2018

Crack Seal – 5 Miles:

2017 Crack Sealing in preparation for roads to be overlaid or chip sealed in 2018. Total of 5 miles of crack seal... **$50,000**

Total Proposed Summer Roads Program 2017 = $668,367

Architecture
Engineering
Environmental
Land Surveying
Companies

An Employee-Owned Company

September 15, 2016

Ms. Beth Bauer
Finance Director
Town of Coventry
1712 Main St
Coventry CT 06238

Re: Boiler Replacements for the High School, Middle School and Complex

Dear Ms. Bauer:

Based on your request we are providing a summary of construction bids, rebates and associated fuel saving for the High School, Middle School and Complex. These project were advertised and bid in accordance with the Town of Coventry's protocol. The solicitation for construction requested Base Bid and Alternate as described within our specification and drawing. The bids were broken down as follows:

Base Bid: All boilers in the Coventry High School, Capt. Nathan Hale Middle School, and the Complex shall be replaced with high efficiency gas boilers. Bids include associated work for a complete project including all associated equipment, electrical, roofing, piping and controls for a complete system.

Alternate Deduct: Same as Base Bid except gas conversion burners shall be installed on the existing boilers in the Complex (i.e. existing boilers to remain).

A summary of received bids is as follows:

Bidder	Base Bid	Alternate Bid Deduct	Alternate Bid
County Wide Mechanical	$650,000	$135,000	$515,000
MJ Daly	$688,450	$202,000	$486,450
Rivco	$797,630	$153,400	~~$644,230~~
Action Air	$793,000	$158,000	$635,000
Crest Mechanical	$727,500	$162,100	$565,400

Committee Recommendation.

SUMMARY OF BIDS

The following is a summary of construction bids.

Bidder	Base Bid	Bid Deduct	Alternate Bid
County Wide Mechanical	$650,000	$135,000	$515,000
MJ Daly	$688,450	$202,000	$486,450
Rivco	$797,630	$153,400	$644,230
Action Air	$793,000	$158,000	$635,000
Crest Mechanical	$727,500	$162,100	$565,400

-84,000 = $566,000

-60,000 = $426,450

$139,550
NET Difference of new versus 2 conversion.

REBATES

Currently utility rebates of $8.00 per 100 MBH are available for the new boilers. For the base bid, a total ~~of~~ $84,000 would be refunded to the Town. The alternate bid reduces the rebates down to $60,000. The reduction in rebate is because burner replacements do not qualify of incentive rebates.

FUEL COSTS

The base will result in an estimated yearly fuel cost of $76,302 for the heating the High School, Middle School and Complex. The alternate bid will result in a yearly fuel cost of $80,402. The additional fuel consumption is because the existing boilers within the complex that will remain are less fuel efficient that the proposed condensing boilers for the complex.

SUMMARY

As detailed below, the total savings of excepting the alternate bid is $139,550 (including reduction in rebates and construction savings). The additional fuel cost is $4,100 per year. Knowing that the existing boiler have approximately 15 years of useful life remaining, it is more cost effective to perform only the burner replacements within the complex at this time.

139,550 / 4,100 = 34 years pay back

	Low Bid	Associated Yearly Fuel Cost	CNG Rebate	First Cost After Rebate	Additional Annual Fuel Cost	First Cost Savings
Seven (7) New Boilers	$650,000	$76,302	$84,000	$566,000	$4,100	n/a
Five (5) New Boilers and Two (2) New Complex Burners	$486,450	$80,402	$60,000	$426,450	n/a	$139,550

Very truly yours,

BL COMPANIES, INC.

By: _____
Gregory A. Longo
Senior Project Manag